# Axico Anti-Stall - FPAC

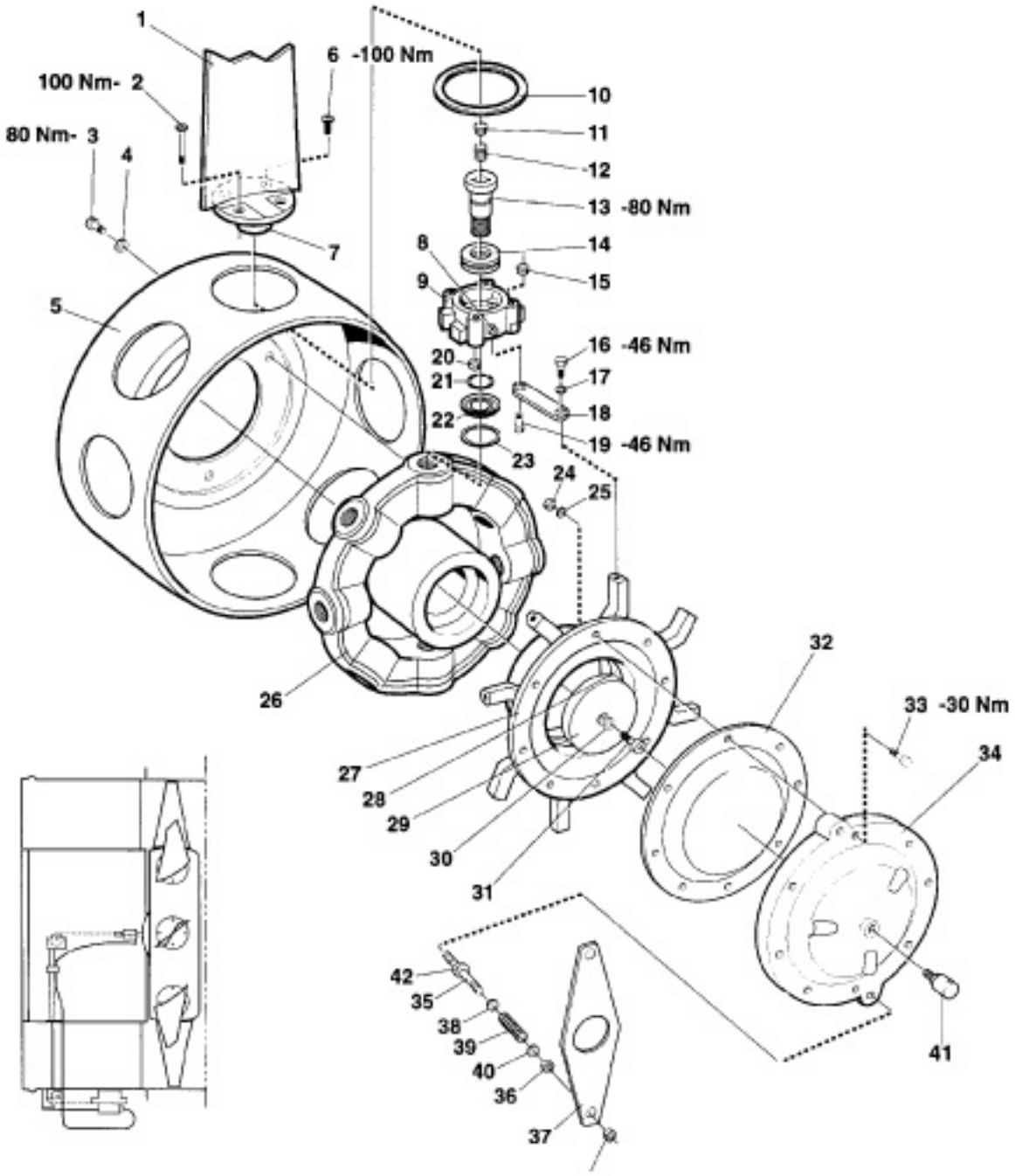


***Safety, Installation, Operation and Maintenance Instructions***

Part No. 419700

FläktWoods

| Contents | Page |
|---|---|
| Safety Regulations | 1 |
| Sound | 1 |
| Qualification | 1 |
| Installation and maintenance | 2 |
| General | 2 |
| Lifting instructions | 3 |
| Electrical connection | 4 |
| Starting | 4 |
| Maintenance | 7 |
| Specifications | 15 |
| Spare parts | 15 |

## Safety regulations

This instruction includes warnings. These indicate the risk of accidents, which cause or can cause personal injuries. Accident risks are arranged into three categories depending upon their probability and the severity of the results of an accident.

Technical warnings indicate the risk of failure or malfunction.

**◆DANGER!**

DANGER indicates that an accident will occur if the regulations are not followed.
The subsequent accident can lead to serious personal injury, possibly fatal, or serious damage to property.

**Caution!**

CAUTION indicates that an accident may possibly occur if the regulations are not followed.
The accident can lead to serious personal injury, possibly fatal, or serious damage to property.

**Important!**

IMPORTANT indicates that an accident may possibly occur if the regulations are not followed.
The accident can lead to personal injury, or damage to property.

**NOTE!**

NOTE indicates the risk of an accident or malfunction if the regulations are not followed.

## Sound

The EG Machinery Directives 89/392/EEC require the maximum sound pressure level, measured at a distance of 1 m from the source, and the sound power level to be specified. Maximum sound pressure will be measured straight in front of the inlet or outlet of the fan.
The levels applicable to the FPAC series of fans see table below.
The sound power level was determined by means of the AMCA 300, ISO 3744, ISO 9614-1 and BS 848 measuring methods.

| Sound power level dB(A) | Sound pressure level dB(A) | Sound pressure level dB(C) |
|---|---|---|
| 138 | 133 | 134 |

## Qualification

All personnel carrying out work and service on this fan must have read and understood the instructions applicable.

## Installation and maintenance

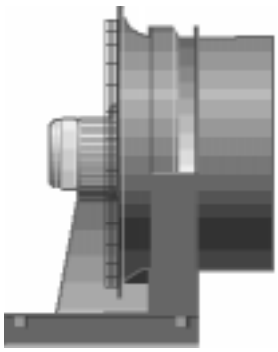

Arrangement 1

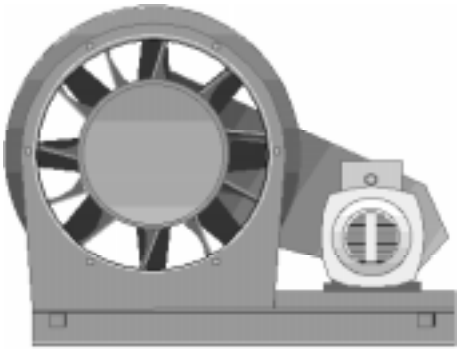

Arrangement 3

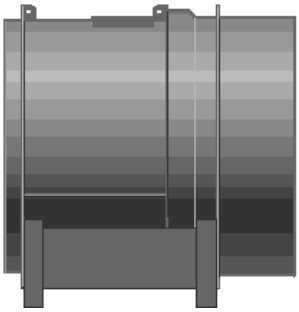

Arrangement 6, horizontal

**Fig. 1**

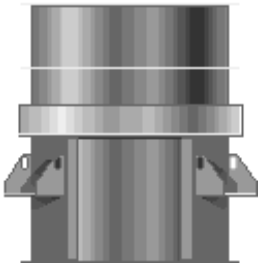

Arrangement 6, vertical

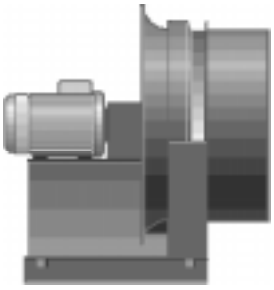

Arrangement 7

## General

The fan is available in five different versions, as shown in Fig. 1

Arrangement 1: Open suction. The fan impeller is mounted direct on the end of the motor shaft.

Arrangement 3: Open suction. Designed for belt drive. Motor and fan are mounted on a common base frame.

Arrangement 6: Designed for duct connection on both sides, either horizontally or vertically. The impeller is mounted direct on the end of the motor shaft.

Arrangement 7: Open suction. The impeller is mounted on a separate intermediate shaft connected to the motor shaft by means of a flexible coupling.

All fans are factory tested with regard to control function, bearings, vibration level and power consumption.

The FPAC type of fans have a pneumatic single-acting actuator incorporated in the impeller. The blade angle is controlled by an externally mounted positioner.

## Lifting instructions

**Caution!**

Arrangement 1: Lifting hooks in the base frame.

Arrangement 3: Lifting hooks in the base frame.

Arrangement 6, horizontal: Lifting eyes on top of the fan.

Arrangement 7: Lifting hooks in the base frame.

## Installation and connection

**Important!**

Each fan is delivered with antivibration mountings and fixing bolts for attachment of the mountings to the fan. These are either temporarily attached to the fan at each mounting point, or packaged in a carton toget-her with the sleeve coupling. The fan shall be bolted to the floor/foundation with 2 or 4 bolts, respectively, per antivibration mounting. These bolts are not included in the delivery.
The fan must be carefully aligned and connected to the duct system by means of the flexible sleeve coupling. Ensure that the fan outlet is positioned 40-140 mm from the connecting duct.
All fans are delivered with antivibration rubber mountings. Two different types of rubber hardness is used - A and B. The bottom plate of the antivibration mountings is marked, e.g.
RA 350 EM B where 'B' indicates the rubber hardness.
In certain arrangements the antivibration mountings may be of different hardness for the same fan and must then be fitted as shown in figure 2 and table 1, respectively, where 'A' and 'B' indicate the rubber hardness.

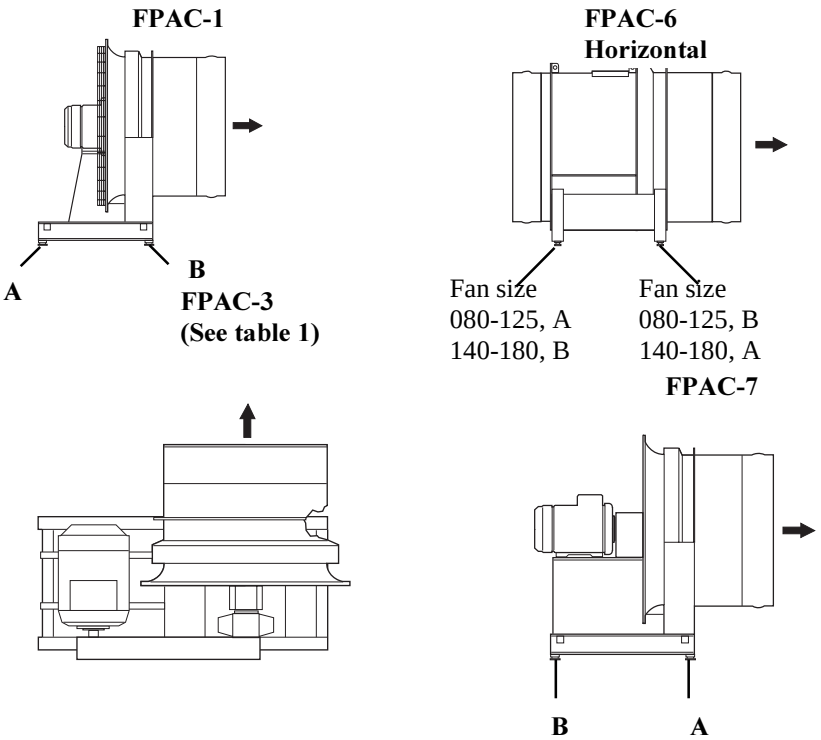


**Fig. 2**

| Fan size | Motor | 1 | 2 | 3 | 4 |
|---|---|---|---|---|---|
| 080 | 180-250 | A | A | A | B |
| 090 | 180-200 | A | A | A | B |
| | 225-250 | A | A | B | B |
| | 280 | B | A | B | B |
| 100 | 200 | A | A | A | B |
| | 225-250 | A | A | B | B |
| 112 | 225 | A | A | B | B |

**Table 1**

**N.B.**
In all other arrangements the fan must be installed with anti-vibration mountings of the same hardness. Do not mix anti-vibration mountings from different fan deliveries.

## Electrical connection

◆DANGER!

**Arrangements 1, 3 and 7:** Direct connection to the terminal box on the motor.

**Arrangement 6:** Connection either direct to the motor or to an external terminal box, if relevant.

### Sound

The sound level specified acc. to EG Machine directives (89/392/EEC) is obtained by adding 15 dBA to the A-weighted total levels specified in the AXICO catalogue. The sound level specified refers to a measuring point located at a distance of 1 m from the machine at a height of 1.60 m above the floor and indicates the highest sound level obtainable at that point, taking into consideration individual spread between different fans.

## Starting

NOTE!

1. Lubricate motor and shaft bearings before starting the fan. Shaft bearings are lubricated through grease nipples on the base frame. Quantities and grades of grease are specified on page 8 and on rating plates at the grease nipples. In arrangement 6 the grease nipples on the motor are connected to external grease nipples, as required.

◆DANGER!

2. Ensure that any blocking of the fan impeller has been removed, and that there are no loose objects in the fan room or ducts that can be drawn into the fan on start-up.
   **Use ear-muffs in the vicinity of an operating fan.**
   **Note that a vacuum can be created in the fan room causing the doors of the room to be flung open or shut with great force.**
3. Start the fan with the blade pitch setting at a minimum. Do not start the fan with closed damper.
4. Check the fan control function by altering the speed control between min. and max. a few times.

### Connection of the pneumatic positioner

Use a plastic hose with outer diameter 6 mm and inner diameter 4 mm to connect the positioner as shown in figure 3:1. Note that only ‘instrument air’ must be connected to the positioner, i.e. air with particles no larger than 10 um and dew-point at -20°C or below. The positioner is on delivery set so that the minimum blade angle is obtained at a signal pressure of 21 kPa (3 psi) and maximum at 105 kPa (15 psi).

### Connection of the electropneumatic positioner

The pneumatic connections to B and C in figure 3:2 are made in the same way as on the pneumatic positioner.
N.B. Use ‘instrument air’. The control signal is electrical 4-20 mA DC. (Internal resistance <200 ohm at 20°C). The signal is connected to terminal K in figure 3:2.
The positioner is on delivery set so that min. blade angle is obtained at a control signal of 4 mA, and max. blade angle at a control signal of 20 mA.

**Required control pressure, kPa**

| Arrangement 1, 6 and 7 | | | Arrangement 3 |
|---|---|---|---|
| n = 980 rpm | n = 1470 rpm | | |
| Number of blades | Number of blades | | Number of blades |
| 8 | 8 | 10 | 8 |
| 250 | 450 | 350 | 500 |

**Table 2**

**Remark**
Max. permissible pressure is 550 kPa.

FPAZ-99-10-2

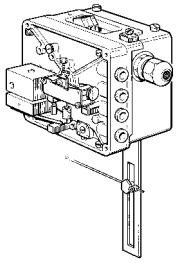

Fig. 3:1

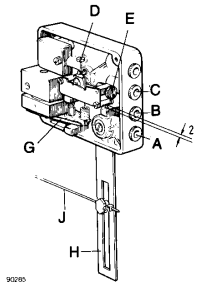


Fig. 3:2

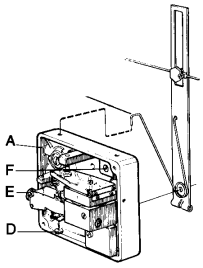


Fig. 3:3

A. Signal pressure from positioner 21-105 kPa (3-15 psi)
B. Output to the impeller
C. Control pressure. See table 2 for pressure required (max. 550 kPa)
D. Zeroing screw
E. Screw for stroke factor
F. Change-over plate
G. Flapper
H. Resetting arm
J. Resetting wire
K. Block terminal

**NOTE!**

## Adjusting the pneumatic positioner

1. Start the fan.
2. Set the signal pressure on connection A at 21 kPa (psi).
3. Set the blades at minimum pitch with zeroing screw D.
4. Set the signal pressure on connection A at 105 kPa (15 psi).
5. Set the blades at aximum pitch with the screw for stroke fastor, E.
6. Verify that the blades turn correctly by changing the signal pressure. The blade pitch should begin to increase from its minimum at 21 kPa (3 psi) and begin to decrease from its maximum at 105 kPa (15 psi).

**NOTE!**

## Adjusting the electropneumatic positioner

1. Start the fan.
2. Set the control signal at 4 mA (block terminal K).
3. Set the blades at minimum pitch with zeroing screw D.
4. Set the control signal at 20 mA (block terminal K).
5. Set the blades at maximum pitch with the screw for stroke factor, E.
6. Verify that the blades turn correctly by changing the control signal. The blade pitch should begin to increase from its minimum at 4 mA and begin to decrease from its maximum at 20 mA.

**NOTE!**

## When adjusting the pneumatic or electropneumatic positioner:

a) The distance between the segment for stroke factor and the stop lug must be 2 mm measured with the blades at minimum pitch.
The segment must not come into contact with the stop lug. The positioner may otherwise be damaged!
b) The travel of the positioner resetting arm should be symmetrical about the vertical line between max. and min. blade pitch.
c) The resetting wire should run correctly on the guide pulleys.

**NOTE!**

The positioner is fitted with adjusting screws for amplification and damping. The response of the positioner to a given change in signal pressure can be adjusted by means of the amplification screw. The damping screw is used to adjust the output pressure of the positioner and thus the speed of response of the actuator. Amplification and damping are preset at the factory and need not normally be adjusted. If adjustment must be carried out, the zero point and stroke factor must also be re-adjusted.

## Function check

Check the operation of the positioner as follows:

1. Disconnect the hose at connection B. Figures 3:1 and 3:2 respectively.
2. Remove the cover of the positioner.
3. Ensure that control pressure is available at connection C.
4. Move the flapper downwards between the nozzles and verify that air flows from connection B.
5. Move the flapper in the opposite direction and verify that the air flow is shut off.

## Reversed operation of the positioner

The positioner on the FPAC type of fans is fitted for direct action, i.e. a rising signal to the positioner increases the pitch of the blades. If reverse action is desired, the positioner can be modified. See figure 3:3 page 5.

1. Disconnect all cables and hoses from the positioner. Remove the positioner.
2. Remove the torsion spring at the rear of the positioner and replace it with special spring FPAC-99-10-2.
3. Fit the positioner in two holes 250 mm below the original holes and turn it 180º so that the resetting arm points upwards.
4. Reconnect all cables and hoses. Turn the change-over plate F to position U.
5. Adjust according to page 5. Verify that the blades now close as the signal increases and open as the signal decreases.
6. Refit the protective covers for wire and positioner.

## Maintenance

**Caution!**

**Measures before any work is carried out on the fan**

To prevent injury to personnel and damage to machinery all fan fuses must be removed and the safety switch turned off before any work on the fan is commenced.

When work is carried out on the fan the impeller shall be blocked with a piece of wood or similar item to prevent rotation as a result of air blowing through the fan blades.

Note that there is risk of injury if hands or fingers get squeezed in the fan control mechanism when the impeller is being removed or fitted.

## General

Follow the maintenance instructions of the motor supplier. The V-belt drive in arrangement 3 should be inspected and maintained in accordance with ABB Fläkt instructions
No. 95-09 -V-Belt Drives - 3:2.

If any of the joints below has been loosened, the joint must be retightened in accordance with the torque specified in table 3 and 4, respectively.

1. Bolts securing the motor to the base frame.
2. Bolts securing the bearing housing of the intermediate shaft to the base frame.
3. Screws retaining the taper bush in the shaft coupling.

| Screw size | Tightening torque (Nm) |
|---|---|
| M10 | 46 ± 2 |
| M12 | 80 ± 4 |
| M16 | 195 ± 10 |
| M20 | 350 ± 15 |
| M24 | 520 ± 20 |

**Table 3**

Tightening torques specified apply to unlubricated screws of strength class 8.8 tightened by means of a torque wrench. Pre-tightening by means of a nut runner may be carried out to about 3/4 of the torque specified.

Tightening torque for TAPER-LOCK® bushes.
Each bush is marked with its number.

| Bush no. no. | Tightening torque (Nm) | Bush no. | Tightening torque (Nm) | Bush no. | Tightening (Nm) |
|---|---|---|---|---|---|
| 1008 | 5,5 | 2012 | 32 | 3535 | 11 |
| 1108 | 5,5 | 2517 | 48 | 4040 | 169 |
| 1210 | 19,5 | 2525 | 48 | 4545 | 191 |
| 1310 | 19,5 | 3020 | 90 | 5050 | 245 |
| 1610 | 19,5 | 3030 | 90 | | |

**Table 4**

## Every month

**Important!**

**Arrangement 3:** Lubricate the shaft bearings through the grease nipples on the base frame.

| | Grease quantity/Bearing |
|---|---|
| Size 080-090 | 25 g |
| Size 100-112 | 45 g |

## Every third month

**Important!**

1. Verify proper operation of the fan control mechanism by changing a few times between min. and max. positions.
2. **Arrangement 7:** Lubricate the shaft bearings through the grease nipples on the base frame.

| | Grease quantity/bearings |
|---|---|
| Size 080-125 | 25 g |
| Size 140-180 | 45 g |

**Important!**

3. Check the fan for vibration and noise from bearings. If vibration levels exceed 7 mm/s measured on the bearing housing, the cause should be established and remedial measures taken.

**Lubrication intervals specified apply to bearings with a temperature of max. 70ºC.**

Grease qualities recommended:

| | | | |
|---|---|---|---|
| Shell | Alvania Grease G3 | Mobil | Mobilgrease HPM |
| | Alvania EP Grease 2 Castrol | Spheerol 2 EP | |
| Statoil | Uniway EP 2 N | Texaco | Multifak EP 2 |
| BP | Energrease LS 2 | SKF | LGEP 2 |
| | | | LGMT 3 |

Remark: See also ABB Fläkt Industri AB:s instructions No. 94-09 - Roller Bearings - 1:2.

## Every other year (from the date of delivery from ABB Fläkt Industri AB)

**Important!**

1. Undo the strap and detach the flexible sleeve from the outlet end of the fan.
2. Open the bolted joint holding the inspection part of the guide vane/CD diffuser section and remove the inspection part.
3. Disconnect the hose and resetting wire at the centre of the impeller. See figure 4.
4. Lubricate the blade bearings through the grease nipple (8). Fill until grease appears at the sealing (22). Use the same grease as for the shaft bearings.
5. Check link arm (18) bearings for wear and play. Replace as required.
6. Remove the rotary coupling (41) and fit a new one.
7. Check the radial throw of the rotary coupling. Max. permissible total throw is 0.6 mm.
8. Fit the resetting wire and the hose at the centre of the impeller as shown in figure 4.
9. Fit the inspection part of the guide vane/CD diffuser section. Fit the flexible sleeve onto the outlet end of the fan and secure with the strap.

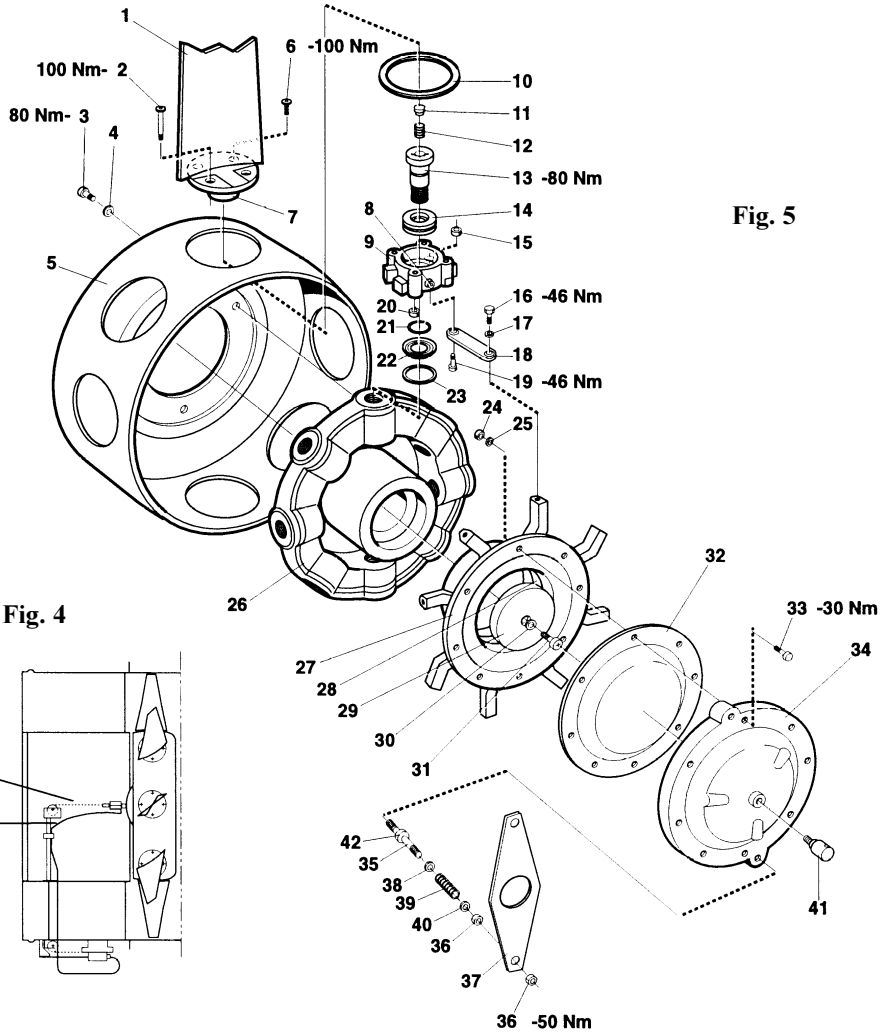


Fig. 5

Fig. 4

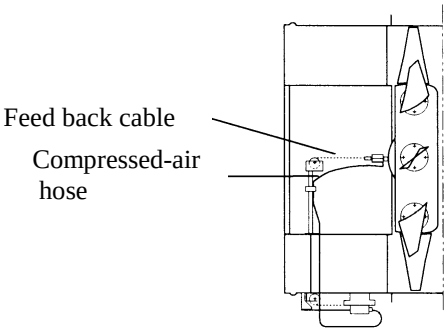


1. Blade
2. Screw
3. Screw
4. Washer
5. Shield
6. Screw
7. O-ring
8. Grease nipple
9. Balde seat
10. Sealing ring
11. Peg
12. Spring
13. Blade spindle
14. Thrust bearing
15. Nut
16. Screw
17. Washer
18. Link arm
19. Screw
20. Nut
21. Safety ring
22. Sealing ring
23. O-ring
24. Nut
25. Washer
26. Hub
27. Control disc
28. Slide bush (Teflon)
29. End disc
30. Washer
31. Screw
32. Diaphragm
33. Screw
34. End cover
35. Driver
36. Nut
37. Driver guide
38. Washer
39. Spring
40. Washer
41. Rotary coupling
42. Minimum pitch stop

## Flexible couplings - arrangement 7

**Important!**

Check the flexible couplings of arrangement 7 for cracks in the rubber tyre. Also check that the bolts of the TAPER-LOCK® bushes and clamping rings are properly tightened. See page 7.

When fitting the coupling or its rubber tyre the instructions specified below shall be followed.

1. Clean all components with special attention to the protective film in the shaft opening and the tapered seat for the TAPER-LOCK® bush.
2. Fit the clamping rings onto the shaft, then fit the flanges onto the shaft. Clean the TAPER-LOCK® bush thoroughly and lubricate with machine oil on the bolt threads and underside of the bolt heads. Position the flanges so that measurement M is attained (see step 3).
3. Ensure that there is sufficient space between the shaft ends to allow for axial play.
4. Align the coupling acc. to figure 6.
5. Open the tyre and fit it over the flanges. Ensure that the tyre is properly located in its seat. It may be necessary to stretch the external diameter of the tyre by means of a mallet in order to seat the tyre correctly. There shall be a gap between the ends of the tyre as specified in table 6 when the tyre is seated correctly.
6. Tighten the screws of the clamping ring alternately (half a turn at the time). Work around each flange until the required torque is attained (table 5).

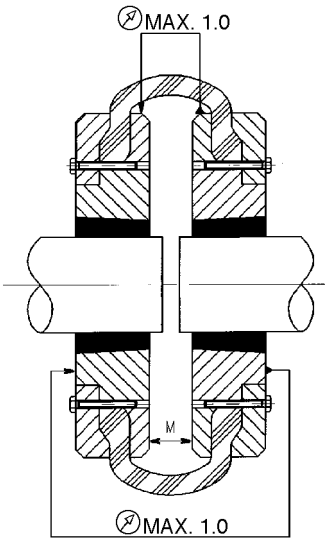


**Fig. 6 Alignment requirements**

**Table 5**

| Size of couplings | F40 to F60 | F70 to F120 | F140 and F160 | F180 to F250 |
|---|---|---|---|---|
| Tyre gap mm | 2 | 3 | 5 | 6 |

**Table 6**

| Size of couplings | | F40 | F50 | F60 | F70 | F80 | F90 | F100 | F110 | F120 | F140 | F160 | F180 | F200 | F220 | F250 |
|---|---|---|---|---|---|---|---|---|---|---|---|---|---|---|---|---|
| M mm | | 22 | 25 | 33 | 24 | 26 | 29 | 29 | 25 | 29 | 33 | 30 | 46 | 48 | 55 | 59 |
| Clamping ring torque | N m | 15 | 15 | 15 | 24 | 24 | 32 | 32 | 32 | 40 | 40 | 75 | 100 | 105 | 140 | 165 |

**Every 4th year** (Will then replace the 2-year service)

**Inspection and lubrication of impeller**

1. Undo the strap and detach the flexible sleeve from the outlet end of the fan.
2. Open the bolted joint holding the inspection part of the guide vane/CD diffuser section and remove the inspection part.
3. Disconnect the hose and resetting wire at the centre of the impeller. See figure 4.
4. Measure the positions of the lock-nuts (36 in figure 5) from the end of each driver (35). Remove the nuts (36), driver guide (37), washers (38) and springs (39).
5. Open the bolted joint (24, 25, 33) and lift away the end cover (34) together with the rotary coupling (41) and the diaphragm (32).
6. Lubricate the blade bearings through the grease nipple (8). Fill until grease appears at the sealing (22). Use the same grease as for the shaft bearings.
7. Check link arm (18) bearings for wear and play. Replace as required.
8. Remove the rotary coupling (41) and fit a new one.
9. Also fit a new diaphragm (32) together with the end cover (34) and tighten the bolted joint (24, 25, 33). Tighten the bolts evenly and alternately to prevent the rotary coupling (41) from running out of truth.
10. Fit the springs (39), washers (38), nuts (36) and driver guide (37).
11. Verify that the lock-nuts are in the same positions as before removal.
12. Check the radial throw of the rotary coupling. Max. permissible total throw is 0.6 mm.
13. Fit the resetting wire and the hose at the centre of the impeller as shown in figure 4.
14. Verify that the control disc (27) does not tilt and jam in the outer end position.
15. Fit the inspection part of the guide vane/CD diffuser section. Fit the flexible sleeve onto the outlet end of the fan and secure with the strap.

## Removing the impeller (Fig. 4 and 5)

1. Undo the strap and detach the flexible sleeve from the outlet end of the fan.
2. Open the bolted joint holding the inspection part of the guide vane/CD diffuser section and remove the inspection part.
3. Disconnect the hoses from connections A and C of the positioner. Disconnect the hose and resetting wire at the centre of the impeller. See figure 4.
4. Open the bolted joint between the guide vane/CD diffuser section and hub cap and remove the cap.
5. Remove the lock-nuts (36 in figure 5), driver guide (37), washers (38) and springs (39).
6. Open the bolted joint (24, 25, 33) and lift away the end cover (34) together with the diaphragm (32).
7. Remove the screw (31), washer (30) and disc (29).
8. Fit a wheel puller to the hub as shown in figure 7 for hub diameters 500 and 630 and figure 8 for hub diameter 800. Remove the impeller.

**Fig. 7**

500/630 mm

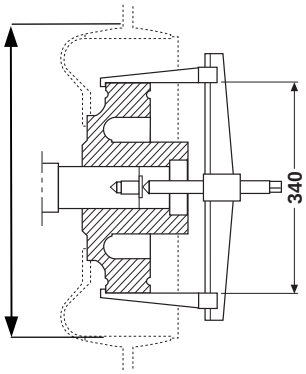


800 mm

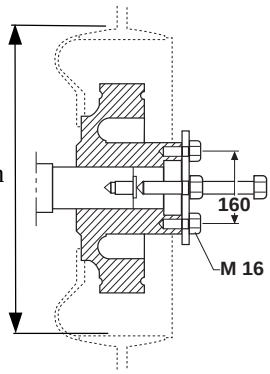


**Fig. 8**

## Fitting the impeller (Fig. 4 and 5)

**NOTE!**

1. Remove the lock-nuts (36 in Fig. 5), driver guide (37), washer (38) and springs (39).
2. Open the bolted joint (24, 25, 33) and lift away the end cover (34) together with the diaphragm (32).
3. Place a thin layer of molybdenum disulphide (MoS2) or lubrication grease on the shaft journal and shaft hole of the fan hub.
4. Fit the impeller onto the shaft. Fit a puller in the threaded hole at the shaft end and pull the impeller onto the shaft.
5. Fit the end disc (29), washer (30) and screw (31).
6. Fit the end cover (34) together with the rotary coupling (41) and diaphragm (32). Tighten the bolted joint (24, 25, 33) evenly and alternately to prevent the rotary coupling (41) to run out of truth.
7. Fit the springs (39), washers (38), nuts (36) and driver guide (37).
8. Verify that the lock-nut positions give the desired maximal blade pitch. See figure 10. Ensure that the lock-nuts have been tightened evenly to remove any risk that the control disc will tilt and jam at maximal blade pitch.
9. Check the radial throw of the rotary coupling. Max. permissible total throw is 0.6 mm.
10. Fit the large part of the guide vane/CD diffuser section. Center the central body thoroughly against the impeller hub and tighten the bolted joint against the impeller casing.
11. Fit the resetting wire and the hose at the centre of the impeller as shown in figure 5. Connect the hoses to the positioner as shown in figure 4.
12. Verify that the control disc (27) does not tilt and jam in the outer end position.
13. Fit the inspection part of the guide vane/CD diffuser section. Fit the flexible sleeve onto the outlet end of the fan and secure with the strap.

Impeller with adjustable blades **(To be adjusted at stand still)**

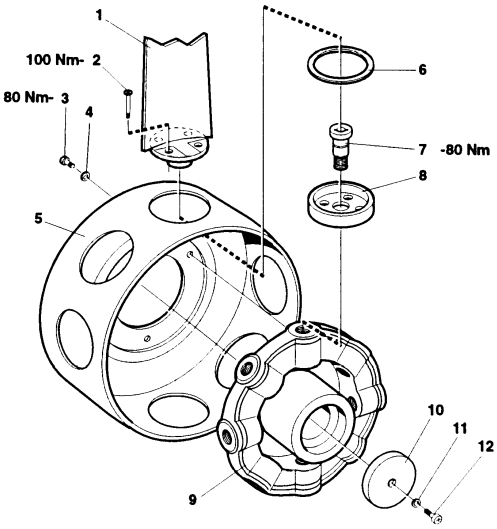


1. Blade
2. Screw
3. Screw
4. Washer
5. Shield
6. Sealing ring
7. Blade spindle
8. Blade seat
9. Hub
10. End disc
11. Washer
12. Screw

**Fig. 9**

**NOTE!**

To adjust the blade pitch, proceed as follows:

1. Remove the flexible sleeve and inspection part of the guide vane/CD diffuser section.
2. Loosen the screws. See figure 9, item 2.
3. Set desired pitch. See figure 10.
4. Tighten the screws.
5. Fit the inspection part of the guide vane/CD diffuser section.
6. Fit the flexible sleeve.

The impeller does not normally need any special maintenance.

**Fig. 10**
**Measuring the blade pitch**

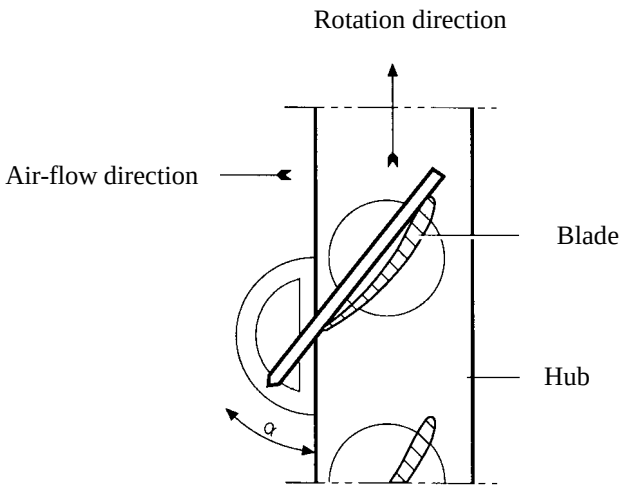

## Recommended tools

The ABB Fläkt tool kit, ordering no. FPAC-99-25, is recommended for servicing the fan. The kit includes a suitable choice of tools (24), slide calipers, feeler gauges, a grease gun, 2 pressure gauges, 3 m plastic hose, nipples and Teflon tape.

## Recommended spare parts

| | |
|---|---|
| 1 | Rotary coupling (41) per fan |
| 1 set | Link arms (18). Number = number of blades. |
| 1 | Diaphragm (32) per fan |
| 1 | Rubber ring for shaft coupling, applicable to arrangement 7 (figure 6 page 10). |
| 1 | Positioner per four fans (figure 3:1 or 3:2 page 5). |

## Touching-up paint

The fan is delivered painted with alkyd-based fast-drying paint, International Primertäck 42 866HB. Colour: NCS 3060-R80B. The same type of paint should be used for touching-up.

## Specifications

**FPAC - a - bbb - c - d - e- f**

Arrangement
1 = Impeller mounted on the motor shaft
3 = For belt
6 = Ducted fan
7 = Impeller on intermediate shaft

Size
080, 090, 100, 112, 125, 140, 160, 180

Hub
5 = ø 500, 6 = ø 630, 8 = ø 800

Number of blades
8 = 8 blades
9 = 10 blades

Size of motor

| | |
|---|---|
| 0 = 132 S, M | 5 = 250 M |
| 1 = 160 M, L | 6 = 280 S, M |
| 2 = 160 M, L | 7 = 315 S, M |
| 3 = 200 L | 8 = 315 L |
| 4 = 225 S, M | 9 = 355 S, M |

Design
2 = Horizontal
3 = Arr. 6 vertical, upward air discharge
4 = Arr. 6 vertical, downward air discharge

## Spare parts

| Description | Indended for | Ordering key | Remarks |
|---|---|---|---|
| Rotary coupling | FPAC-a-bbb-c-d-e-f | FPAC-99-01 | |
| Link | FPAC-a-(080-100)-5-8-e-f<br>FPAC-a-(090-112)-6-8-e-f<br>FPAC-a-(112-140)-8-9-e-f | FPAC-99-02-1 | Er.required = 1 per blade |
| | FPAC-a-(112-125)-5-8-e-f<br>FPAC-a-(125-180)-6-8-e-f<br>FPAC-a-(160-180)-8-9-e-f | FPAC-99-02-2 | |
| Diaphragm | FPAC-a-bbb-5/6-d-e-f | FPAC-99-03 | |
| | FPAC-a-bbb-8-d-e-f | FPAC-99-04 | |
| Positioner | FPAC-a-bbb-c-d-e-f | FPAC-99-05-3 | |
| Electro-Pneumatic Positioner | FPAC-a-bbb-c-d-e-f | FPAC-99-05-5 | |
| Fabric duct | FPAC-a-080-c-d-e-f-<br>-090-<br>-100-<br>-112-<br>-125-<br>-140-<br>-160-<br>-180- | FPAC-99-06-1<br>-2-<br>-3-<br>-4-<br>-5-<br>-6-<br>-7-<br>-8- | |

| Description | Intended for | Ordering key | Remarks<br>Size |
|---|---|---|---|
| Rubber element<br>for shaft coupling | FPAC-7-bbb-c-d-0-f | FPAC-99-07-1 | F 60 |
| | -1- | -1 | F 60 |
| | -2- | -2 | F 80 |
| | -2- | -3 | F 90 |
| | -4- | -3 | F 90 |
| | -5- | -4 | F 120 |
| | -6- | -4 | F 120 |
| | -7- | -5 | F 140 |
| | -8- | -5 | F 140 |
| | -9- | -6 | F 160 |
| | **Exception**<br>FPAC-7-100-8-9-1-2<br>-112-8-9-1-2 | FPAC-99-07-2 | F 80 |
| | -125-8-9-2-2 | FPAC-99-07-2 | F 90 |
| Spring | FPAC-a-bbb-c-d-e-f | FPAC-99-10-1 | Intended for standard positioner. |
| Spring<br>Inverted operation | FPAC-a-bbb-c-d-e-f | FPAC-99-10-2 | Intended for positioner inverted operation. |
| Feed back wire<br>with connection details | FPAC-a-bbb-c-d-e-f | FPAC-99-11 | |
| Assembling<br>for blade and links | FPAC-a-bbb-c-d-e-f | FPAC-99-21 | Blades and links are not included. |
| Tool bag | FPAC-a-bbb-c-d-e-f | FPAC-99-25 | 24 pcs tools, slide calipers, feeler gauges, lubric. gun, 2 manometers, 3 m long plastic tubing, nipples and teflon tape. |

## Spare parts to be ordered direct from Supplier

| Description | Indended for | Ordering key | Remarks |
|---|---|---|---|
| Bearings<br>for shaftmounting | FPAC-3-(080-090)-5/6-d-e-f | SKF: 21313 CCK+H 313 | 2 |
| | -3-(100-112)-6-d-e-f | SKF: 23218 CCK+H2318 | 2 |
| | -7-(080-090)-c-d-e-f | SKF: 2309 K+H2309<br>SKF: 21309 K+H309 | 1<br>1 |
| | -7-(100-112)-c-d-e-f | SKF: 1311 K+H311<br>SKF: 22311 CK+H2311 | 1<br>1 |
| | -7-(125-180)-c-d-(2-6)-f | SKF: 1311 K+H311<br>SKF: 22311 CK+H2311 | 1<br>1 |
| | -7-(125-180)-c-d-(7-9)-f | SKF: 1315 K+H315<br>SKF: 22315 CK+H2315 | 1<br>1 |

Normal clearance or C3 clearance can be selected.

**Notes**

*We Bring Air to Life*

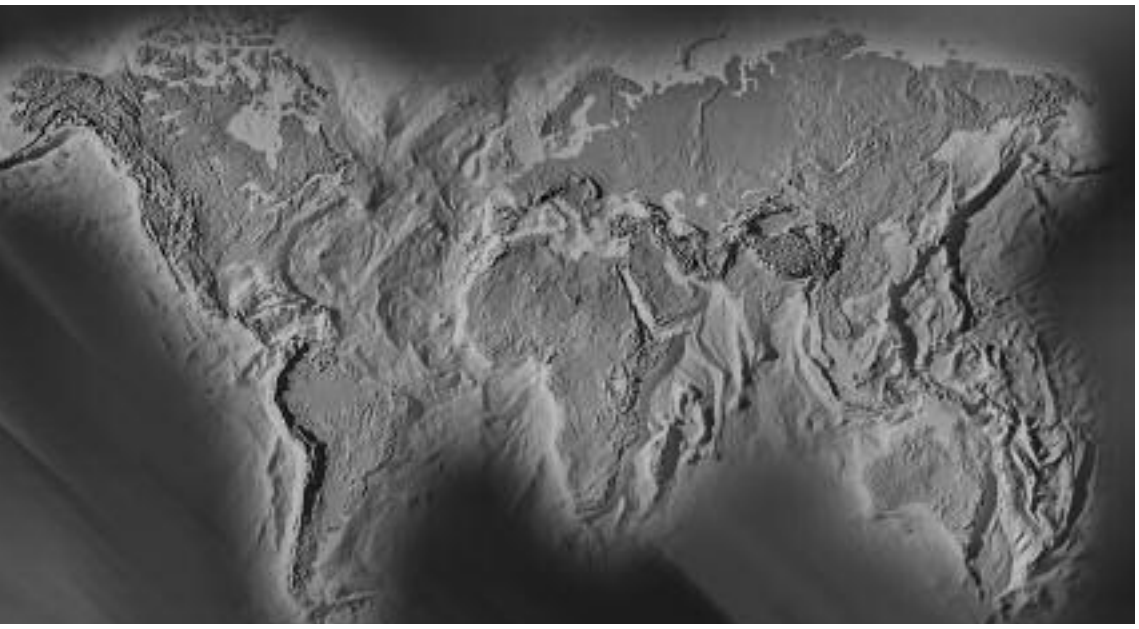

**Fläkt Woods Group provides a full range of products and solutions for buildings ventilation, air treatment and industrial air movement**

## Head office


**Buildings Air Climate - United Kingdom**

Fläkt Woods Ltd
Axial Way
COLCHESTER, CO4 5ZD
United Kingdom
Tel: +44 1206 222555
Fax: +44 1206 222777


Sales Offices available World Wide - See our website for details

**www.flaktwoods.com/uk**


Due to a policy of continuous development and improvement the right is reserved to supply products which may differ from those illustrated and described in this publication. Certified dimensions will be supplied on request on receipt of order. Part No. 419700 FPAC


FläktWoods