# *JMP Series - Plate Mounted Axial Flow Fans*

***Safety, Installation, Operation and Maintenance Instructions***

Part No. 502876

FläktWoods

# Installation Operation and Maintenance Instructions for JMP Series Plate Mounted Axial Flow Fans

**SAFETY**

**This product contains rotating parts and electrical connections which can be a danger and cause injury.**

1. Whatever the application, access from either side of the rotating parts must be prevented whilst the fan is operating. Guards are available for this purpose. (Motor side guards are fitted as standard, impeller side guards are also available.)

2. The fan must be earthed and no installation or maintenance work should be attempted without first switching off and isolating the fan and its controls from the electrical supply and allowing the rotating parts to come to rest.

3. The fan is intended for moving air and is not suitable for use in environments or for purposes other than those specified in these instructions. If used improperly, or for different purposes without the prior agreement of Fläkt Woods Ltd or their agents, then such use would be outside the scope of reasonably foreseeable circumstances, and may be unsafe.

4. It is the responsibility of the users to satisfy themselves that the fan is suitable for the conditions of use, and that installation and regular maintenance is carried out by personnel with the appropriate skills and in accordance with these instructions.

5. If the installer or user is unable to understand the information in this manual or there is any doubt that a safe and reliable installation of the equipment can be assured, the manufacturer or his agent should be contacted for advice.

## INTRODUCTION

The series JMP Range of Plate Mounted Axials is designed to move air from one side of the mounting plate to the other against a resistance. It should not be used for any other purpose. Where indicated in the product literature, the flow may be varied by controlling the speed of the motor with a suitable speed regulator. The maximum ambient temperature in which an individual fan may be used is given on the nameplate.

Standard fans are suitable for handling air containing free moisture but with any air containing corrosive or flammable fumes or explosive mixtures, the installation should be treated with caution. Consult your local sales agent if in doubt with the application. It is the responsibility of users to satisfy themselves that the fan is suitable for the conditions of use, and that regular maintenance is carried out by the personnel with the appropriate skills and in accordance with these instructions. Failure to comply with these instructions may invalidate the guarantee. Installers, users and maintainers are reminded of their duties under the UK Health & Safety at Work Act, the European Community Workplace Directives and other national legislations on safety.

## STORAGE

The fans should be stored in a clean, dry location and cartons should not be stacked more than six high.

## INSTALLATION

When you receive your fan, check to see if the size, speed and electrical supply details are as required. All fans are wired for Form ‘A’ running, the airflow direction being as shown on the Fan Construction illustration. To assist installation, a mounting template is supplied in the carton to allow the appropriate fixing holes to be positioned. The fan should be rigidly fixed to the mounting surface using four fixing screws provided. Should this be uneven, it will be necessary to pack the mounting frame to prevent any distortion to the bellmouth causing the impeller to foul.

The fan may be run with the shaft at any angle. The motor, as despatched, is protected to IP55, having sealed spigot joints, gasketted terminal box lid, and face seal at the shaft end. Six drain plugs are provided, two in the terminal box lid, two in the tail end cover and two in the drive end cover. If the fan is to operate outdoors or in damp air, the motor must have its drain plugs removed converting it to IP23. However the orientation of the fan must be such that the drain hole(s) will provide drainage of condensed moisture.

Note: If the drain plug in the drive end cover is to be removed, the impeller may require removal from the shaft. Before operation, check impeller is free and rotation is correct. A directional arrow is cast into the impeller blades.

## CUSTOMER WIRING INSTRUCTIONS

### Connection Diagrams

Depending upon the requirements of fan operation and control, i.e. speed control, 2 speed etc. it may be necessary to select an alternative connection diagram for wiring up to the fan to that supplied in the fan terminal box. These will be indicated in the panel marked “connection” on the motor nameplate (See below for details).

### Single Phase

All fans are fitted with the capacitor fixed to the motor arm and wired to the terminal block for the correct rotation. To connect the supply to the motor, remove the terminal box lid at the tail end to expose the terminal block. Remove the CM20 cable gland screwed bush and blanking washer. Thread the cable through the bush and remaining gland assembly and wire to the terminal block. Replace bush and tighten just enough to compress the grommet to hold the cable and prevent the ingress of water.

Cables between 7 and 10.5mm diameter should be used. Replace the terminal box lid, not forgetting the gasket. The fan must be earthed using the earth connection inside the terminal box.

Overheat protection, providing automatic cut-out, is included and internally connected as supplied. These fans are liable to automatically restart. Therefore the fan must be isolated before attempting any maintenance work. If required, the protector leads can be brought out, eg. to an external contactor for remote control. In this case remove the link between ‘K’ and ‘UZ’ and connect supply ‘UZ’ and ‘U”.

Where the fan is suitable for speed control, this is indicated in the catalogue. Some single phase fans can be controlled by the 2 wire method, although Fläkt Woods’ recommendation is to use the 3 wire method with its distinct advantages.

The appropriate connection diagram letters are shown on the motor nameplate located on the periphery of the terminal box housing, which will indicate up to two possibilities.

WARNING: With the preferred 3 wire circuit for speed regulation it is essential that the link between ‘U’ and ‘P’ is removed as indicated in Diagrams G and H on page 5.

The first letter indicates constant speed.
Second letter indicated variable speed by 3 wire method.
Third letter indicates variable speed by 2 wire method where offered.

eg. | A G L | CONNECTION

| | | | |
|---|---|---|---|
| A | = | 1 Phase. | Integral Capacitor with O/heat Protector |
| G | = | 1 Phase. | Integral Capacitor with O/heat Protector used with Auto-Transformer or Electronic Controllers (3 Wire Control) |
| L | = | 1 Phase. | Integral Capacitor with O/heat Protector used with Auto-Transformer or Electronic Controllers (2 Wire Control) |

### SAFETY GUARDS

Motor side guards to BS848 Part 5 are fitted as standard. These are full compliance guards of spiral wound wire with PVC coating and are fitted in case the circumstances described in the safety panel, make it necessary. They are secured to the arms using spring wire clips, or attached to the wallplate with plastic clips.

Impeller side guards can be supplied of similar construction for attachment to the wallplate by plastic clips. Where a fan is installed with the shaft vertically down, and blowing into an accessible area, an impeller side guard must be fitted.

### MAINTENANCE

No installation or maintenance work should be carried out without isolating the fan and its controls from the electrical supply, allowing the impeller to come to rest.
All items below should be carried out on a regular basis, the frequency depending upon the application.
Check motor fins and remove deposits where necessary
Clean impeller
Check if assembly and mounting screws are tight
Check that all ancillary fittings are tight
Ensure the guards are correctly replaced after maintenance work

Bearings are supplied 'sealed for life' and should not normally require attention. Lubrication of bearings by customers is not recommended. In the event of a bearing failure, exchange motors can be supplied.

## COMMUNICATIONS

Any queries regarding operational problems, accompanied by details shown on the motor nameplates, should be referred to your local Fläkt Woods' Office or Agent.

Where a failure occurs whilst the product is under guarantee the Fläkt Woods Ltd Service Department should be contacted before any repair work is undertaken. Telephone (01206) 222 555.

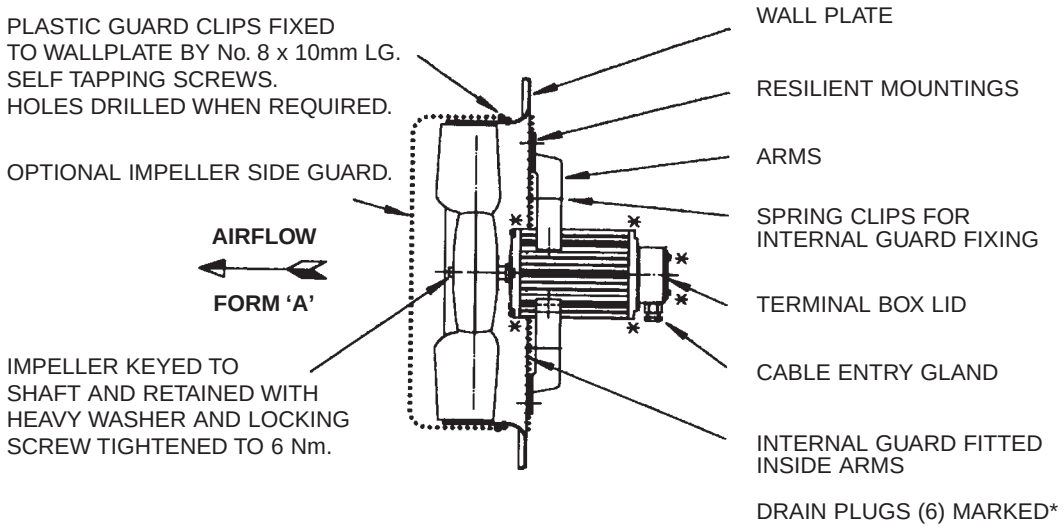


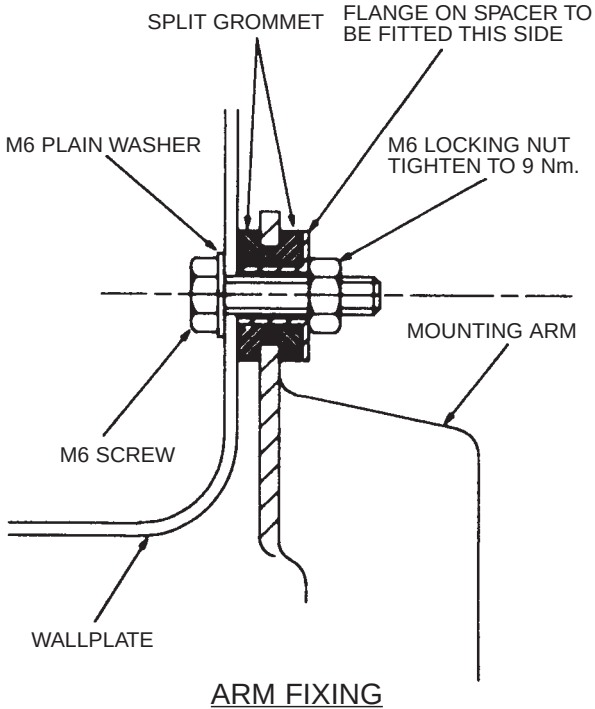


ARM FIXING
TO METAL PLATE

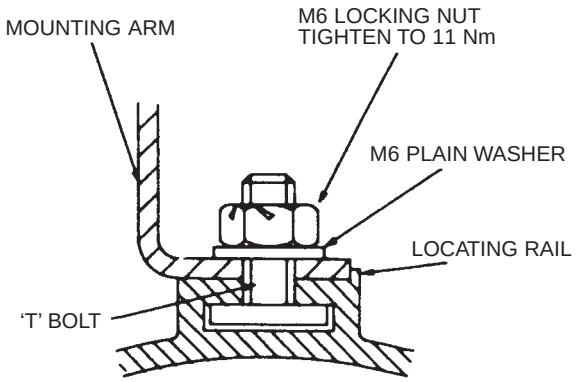


ARM FIXING
TO MOTOR

# JMP PLATE MOUNTED AXIAL FLOW FANS WHEN FITTED TO CURB MOUNTED ROOF UNITS, DSJ 315mm - 500mm AND DVJ 355mm - 500mm TYPES.

| FAN SIZE | DIMN. 'X' | DIMN. 'Y' |
|---|---|---|
| 315 | 375 | 325 |
| 355 | 440 | 400 |
| 400 | 470 | 400 |
| 450 | 550 | 500 |
| 500 | 600 | 500 |

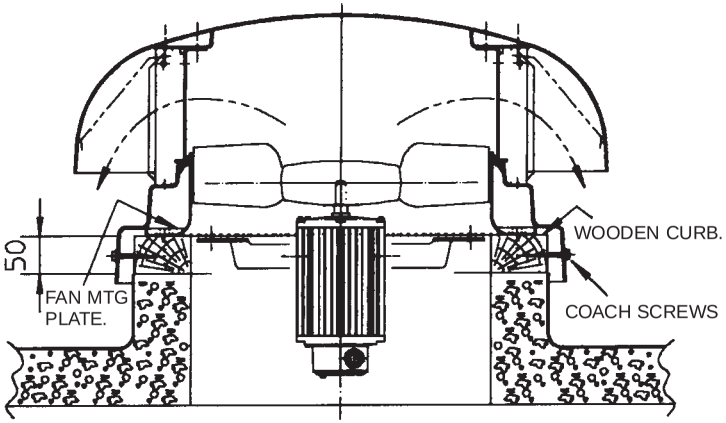


CURB MOUNTED SIDE DISCHARGE DSJ TYPE.

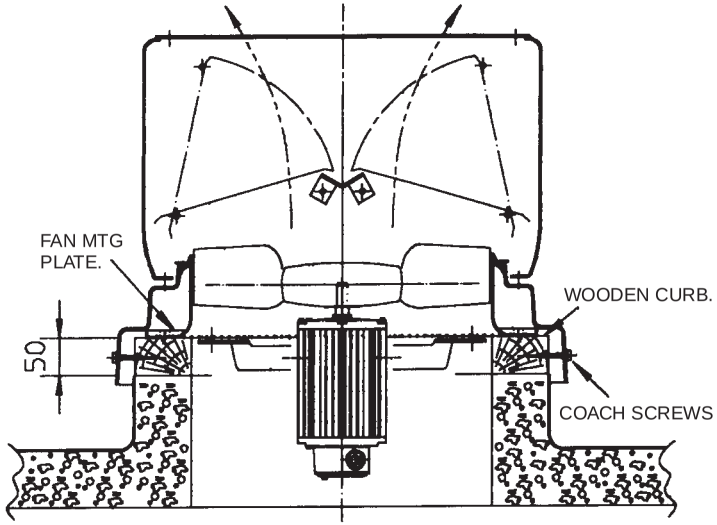


CURB MOUNTED VERTICAL DISCHARGE DVJ TYPE.

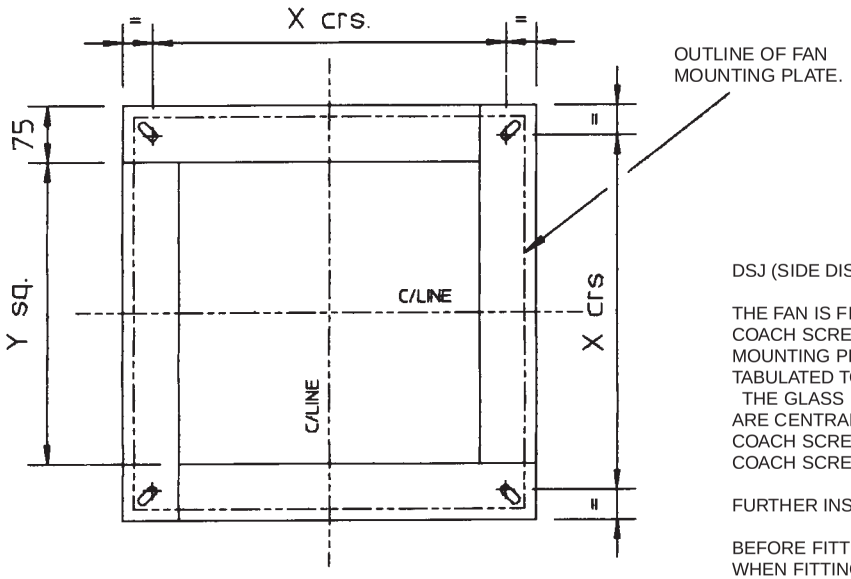


PLAN VIEW OF FIXING TO CURB FOR VERTICAL & SIDE DISCHARGE TYPES.
FAN MOUNTING PLATE - AT 'X' CENTRES ON UPPER FACE.
ROOF UNIT SKIRT - AT CENTRELINES ON FOUR SIDE FACES.

DSJ (SIDE DISCHARGE) AND DVJ (VERTICAL DISCHARGE) TYPES.

THE FAN IS FIXED TO THE TOP FACE OF THE CURB WITH THE FOUR 3/8" DIA. x 1.5" LONG (10mm DIA. x 38mm LONG) COACH SCREWS AND FOUR M10 STEEL WASHERS PROVIDED. FIXING IS THROUGH THE SLOTTED HOLES IN THE FAN STEEL MOUNTING PLATE. SCREW PILOT HOLES OF SUITABLE SIZE ARE FIRST DRILLED IN THE CURB AT DIMENSIONS 'X' AS TABULATED TO PREVENT SPLITTING OR DAMAGE TO THE WOODEN CURB WHEN COACH SCREWS ARE FIRMLY TIGHTENED.
THE GLASS FIBRE ROOF UNIT THEN FITTED ONTO THE CURB TO ENCLOSING THE FAN. ENSURE ROOF UNIT AND FAN ARE CENTRALISED, THEN FIX THE ROOF UNIT TO THE CURB SIDES WITH FOUR 3/8" DIA. x 2.5" LONG (10mm DIA. x 64mm LONG) COACH SCREWS AND FOUR M10 PLASTIC SEALING WASHERS PROVIDED. FIXING IS THROUGH THE HOLES IN THE UNIT SKIRT SIDES. COACH SCREWS MUST NOT BE OVER TIGHTENED AS THIS MAY DAMAGE THE UNIT.

FURTHER INSTRUCTIONS FOR DVJ (VERTICAL DISCHARGE) TYPE ONLY.

BEFORE FITTING THE ROOF UNIT, ENSURE THAT THE RUBBER SEALING STRIP IS FIRMLY IN POSITION AROUND SKIRT HOLE EDGE. WHEN FITTING THE ROOF UNIT THE FAN PLATE TUNNEL PASSES THROUGH THE SKIRT HOLE AND RUBBER SEAL. TO ACHIEVE THIS, SOFT SOAP OR A SUITABLE LUBRICANT NOT HARMFUL TO NATURAL RUBBER MUST BE USED. AFTER FITTING CHECK THAT THE FAN TUNNEL PROJECTS THROUGH SKIRT HOLE AND THE RUBBER STRIP IS CORRECTLY POSITIONED BETWEEN SKIRT AND FAN PLATE TO PROVIDE AN ADEQUATE WEATHERPROOF SEAL.

REFER TO NOTES UNDER ‘CUSTOMER WIRING INSTRUCTIONS’

# SINGLE SPEED FANS SINGLE PHASE

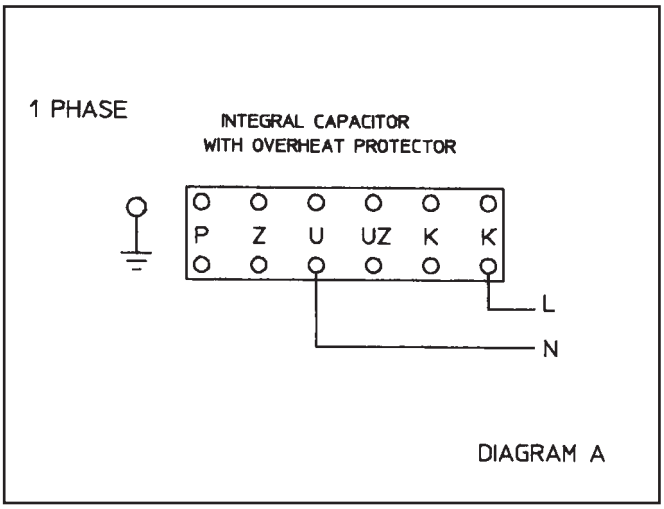


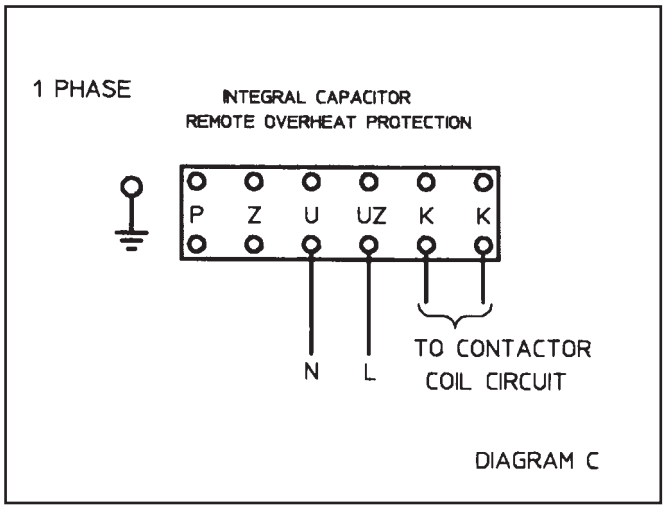


# SPEED CONTROLLED FANS SINGLE PHASE

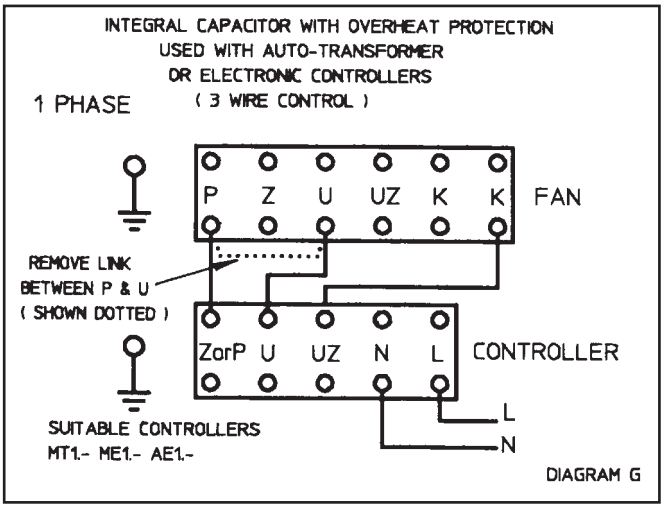


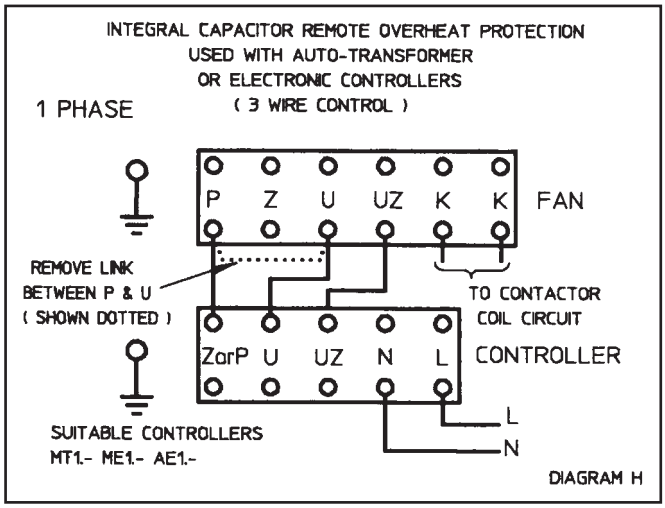


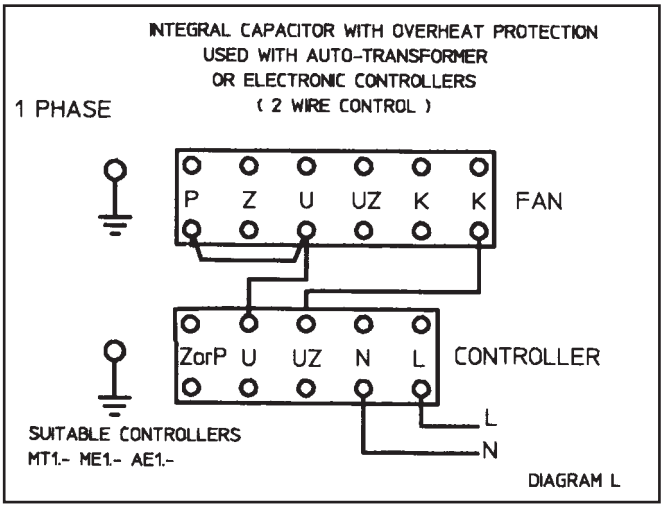


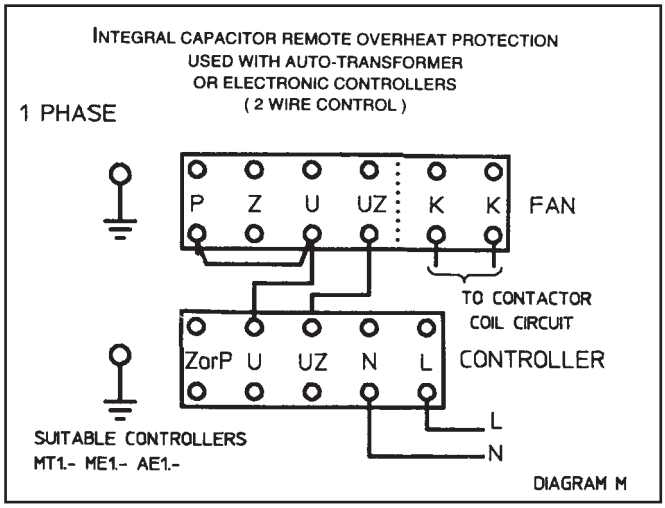

# *We Bring Air to Life*

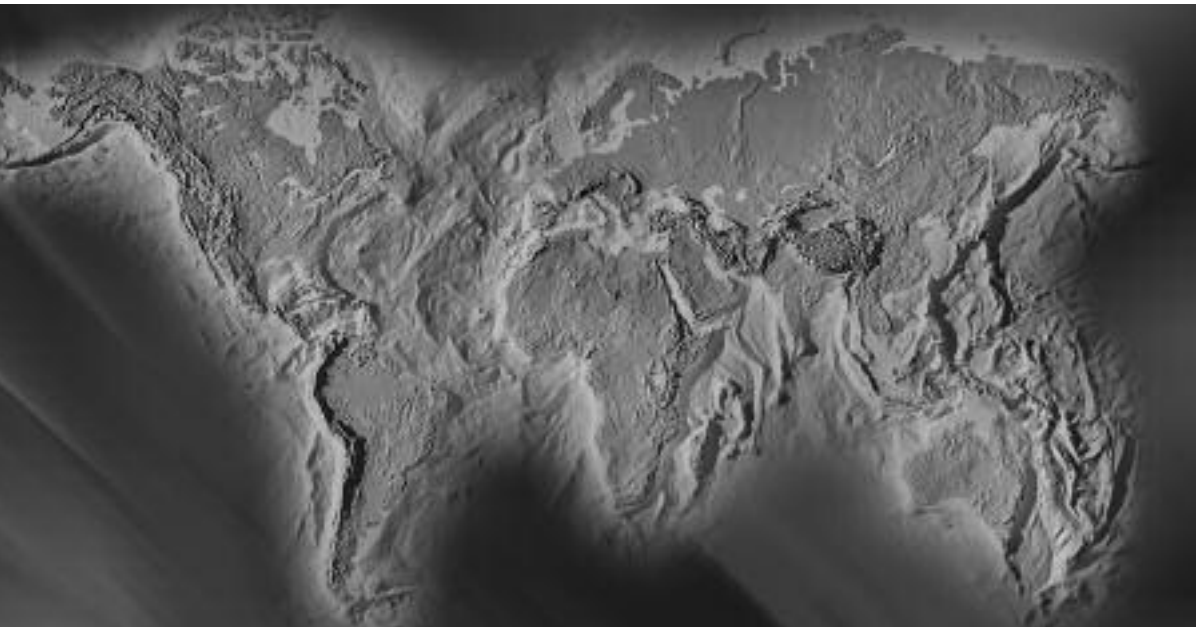

**Fläkt Woods Group provides a full range of products and solutions for buildings ventilation, air treatment and industrial air movement**


### Sales Office

**Fläkt Woods Ltd**
Unit 6240, Bishops Court
Solihull Parkway
Birmingham
B37 7YB
Tel: +44 (0)121 717 4680
Fax: +44 (0)121 717 4699

### Sales Office

**Fläkt Woods Ltd**
First Floor, Entrance 6,
Crossford Court
Dane Road, Sale, Cheshire
M33 7BZ
Tel: +44 (0)161 969 1992
Fax: +44 (0)161 969 4612

### Head Office

**Fläkt Woods Ltd**
Axial Way
Colchester
Essex
C04 5ZD
Tel: +44 (0)1206 222 555
Fax: +44 (0)1206 222 777


Sales Offices available World Wide - See our website for details

**www.flaktwoods.co.uk**


Due to a policy of continuous development and improvement the right is reserved to supply products which may differ from those illustrated and described in this publication. Certified dimensions will be supplied on request on receipt of order.

Copyright, Fläkt Woods Ltd, 2008.

All rights reserved. No part of this publication may be produced in any material form by any means without the written permission of Fläkt Woods Ltd. Any unauthorised use of this data may result in legal proceedings.



FWJRG/0608/PN416421


FläktWoods