WOODS
AIR MOVEMENT

Mancooler
Portable Cooling Fan

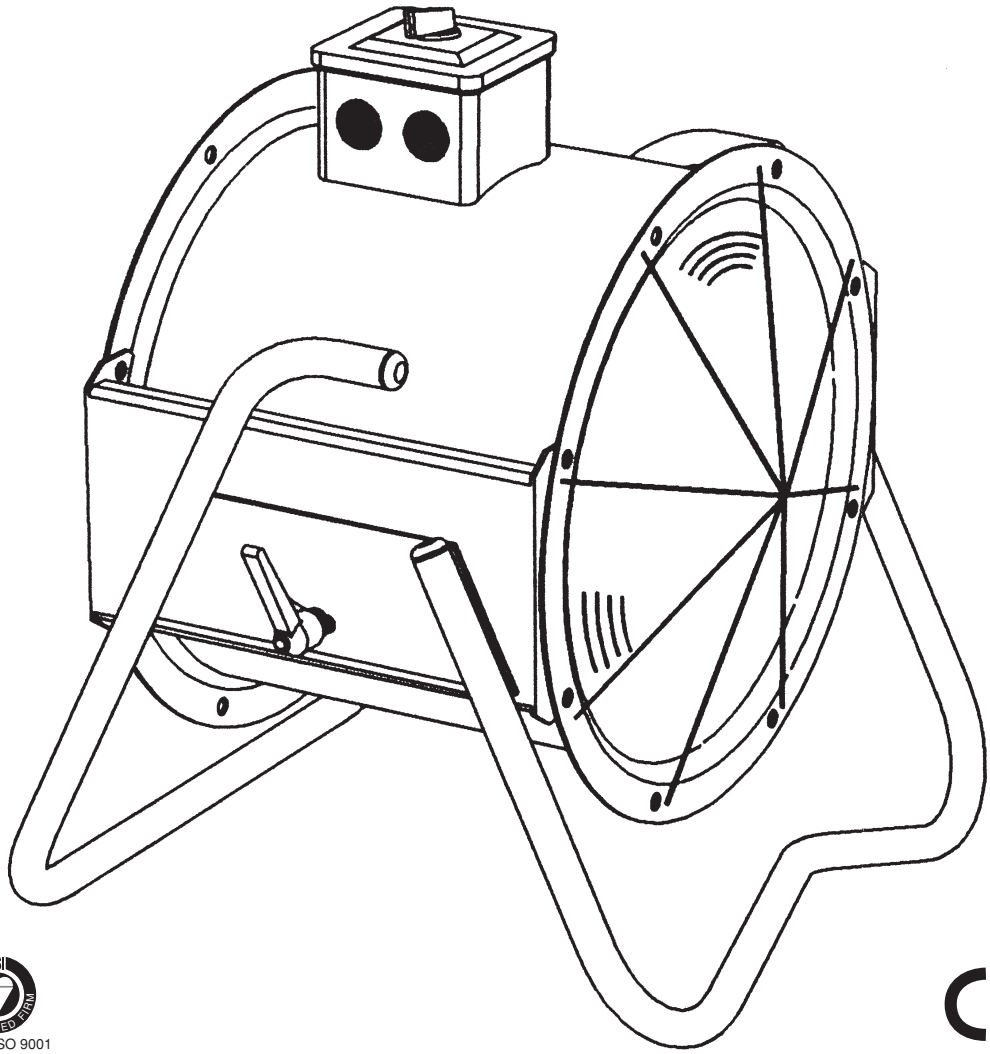

BS EN ISO 9001

CE

Safety, Installation, Operation and Maintenance Instructions

To be Retained by the User for Future Reference

Part No. 252703

SAFETY

This product contains moving parts and electrical connections which can be a danger and cause injury.

If the installer is unable to understand the information on this sheet or there is any doubt that a safe and reliable installation of equipment can be assured, the manufacturer or his agent should be contacted.

1. The fan must be earthed and no installation or maintenance work should be attempted without first switching off and isolating the fan and its controls from the electrical supply and allowing the rotating parts to come to rest.

2. The fan is intended for moving air and is not suitable for use in environments or for the purposes other than those specified in these instructions. If used improperly, or for different purposes without the prior agreement of Xpelair or their agents, then such use would be outside the scope of reasonably foreseeable circumstances and may be unsafe.

3. It is the responsibility of the users to satisfy themselves that the fan is suitable for the conditions of use, and that installations and regular maintenance is carried out by personnel with the appropriate skills and in accordance with these instructions.

SUPPLY
Check that the voltage and other circuit details printed on the nameplate agree with your supply.

CONNECTIONS
A diagram of connections is detailed below and will be found inside the switch box on the fan casing.
An adequately protected flexible cable, including an earth core, should be used for connection to the supply.

EARTHING
Connect the earth core to the earthing screw inside the terminal box.

STARTING
The direct-on-line switch on the fan casing is the only starting equipment necessary.

PROTECTION
Any fuses in the circuit should be regarded as protecting the wiring against the effects of short circuits or earths only.

ROTATION AND AIRFLOW
The correct rotation of the impeller and direction of airflow is shown by an arrow on the casing.

LUBRICATION
Motors are supplied with sealed-for-life bearings which require no re-lubrication.

OPERATING CONDITIONS
All standard Portable Cooling fans are suitable for handling air between –40°c to +50°c.

TECHNICAL ADVICE AND SERVICE
Xpelair have a comprehensive range of services including:

- Free technical advice from Engineers on all aspects of ventilation.
- Service and maintenance contracts to suit all requirements.
- Free design service, quotations and site surveys.

Please ask for details:

- By telephone on Techline: 08709 000430.
- By fax on Techfax: 01733 310606.
- At the address below.
- Service Repair Telephone Line: 08709 077077
- At the address below.

HEAD OFFICE NATIONAL SALES OFFICE SPARES AND TECHNICAL SERVICES
Xpelair Limited, Morley Way, Woodston, Peterborough, PE2 9JJ. England
Telephone: 01733 456801
Fax : 01733 893322

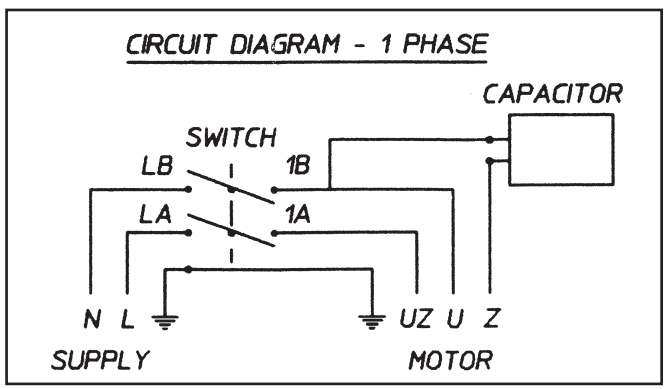

© Copyright Xpelair ENGLAND 2000