Induction Thrust Fan

www.flaktwoods.com/oandm

Safety, Installation, Operation and Maintenance Instructions

Part No. 401074

FläktWoods

Contents

		Page
1.	About This Manual	3
2.	Designated Use	4
3.	Safety	5
4.	Product Description	6
5.	Transport and Storage	7
6.	Installation	8
7.	Electrical Connection	9
8.	Commissioning/Operation	11
9.	Maintenance	11
10.	Malfunction/Disturbances	13
11.	Service, Spare Parts and Accessories	13
12.	Annex	14
EC Declaration of Conformity		15

1. About This Manual

These operating instructions are an integral part of the Induction Thrust Fan (ITF). Fläkt Woods Limited shall not accept any liability or provide any warranty cover for primary damage or secondary damage arising as a consequence of disregarding these operating instructions.

- Read operating manual carefully before use.
- Retain operating manual for entire service life of the fan.
- Keep operating manual accessible to personnel at all times.
- Pass operating manual on to any subsequent owner or user of ITF.
- Insert any supplementary instructions received from the manufacturer in the operating manual.

1.1. Validity

This operating manual applies to Induction Thrust Fan models IF504801, IF754801 only.

1.2. Target Group

This operating manual is intended for operators and qualified professionals trained in installation, commissioning, operation, maintenance and decommissioning.

1.3. Other Applicable Documents

- In addition to reading these instructions, due notice should also be taken of the following documents and specifications on the ITF:

- IEC 364/ DIN VDE 0100
- EN 60204-1 and VDE 0113-1
- EN 294 - EN ISO 12100-1; -2
- DIN EN 12101-3 - VDMA 24186-1
- Type plate - Technical catalogue

1.4. Symbols and Markings

1.4.1. Use of Warning Signs Signal word

Signal Word

Nature, source and consequences of hazard!

- Steps required to avert danger

1.4.2. Levels of Danger in Warning Signs

Table 1-1: Levels of danger in warning signs

Symbol / Danger Level	Likelihood of Occurrence	Consequences of Neglect
Danger	Imminent danger	Death, serious physical injury
Warning	Potential danger	Death, serious physical injury
Caution	Potential danger	Minor physical injury
Caution	Potential danger	Damage to property

1.4.3. Notes

Note
Note giving pointers for easier or safe work.
▸ Steps required for easier or safe work.

1.4.4. Other Symbols and Markings

Table 1-2: Other symbols and markings

Symbol	Meaning
✓	Requirement for an operation
▸	Operation with one step
1. .... 2. .... 3.	Operation with several steps
•	Bullet point (primary list)
-	Bullet point (secondary list)
Accentuation (bold)	For emphasis

2. Designated Use

2.1. Operating Data/Maximum Ratings

Caution

Risk of injury! ▸ Adhere to technical specifications and permissible limits.

For technical specifications reference should be made to the type plate, technical data sheet and technical catalogue.

In the event of fire, the ITF is to operate with smoke and heat. The ITF is also suitable for standard ventilation.

Range	permissible temperature/time at smoke extract	permissible temperature at cont. operation
ITF	+300°C / 120 min	-20°C up to +40°C

Caution: After use in the event of fire replace the Induction Thrust Fan!

2.2 Improper use

As an example of improper use would be the conveying of:

- media with unacceptable high or low temperatures
- aggressive media
- humid media
- abrasive media

3. Safety

3.1. Product Safety

Fläkt Woods fans offer a high degree of operational safety and high quality standards guaranteed by a certified Quality Management System (EN ISO 9001).
Before leaving the factory all the fans are inspected and sealed with a mark of conformity.
Nevertheless, when operating ITF supplied by Fläkt Woods Limited there can be a risk of death or injury for the user or third parties.

- Only use ITF in perfect working order and as intended, having due regard for safety, an awareness of hazards and in due compliance with the operating instructions.
- Only fit components certified for smoke extract purpose!
- Arrange immediate repair of any faults which could compromise safety.

3.2. Safety Instructions

- The ITF may only be commissioned, operated and serviced in compliance with the following instructions:

- Operating instructions
- Warning and information signs on the ITF.
- Any other operating and installation instructions pertaining to the ITF.
- Terms and requirements relevant to the ITF.
- Applicable national and local regulations, especially regarding health & safety and accident prevention.

3.3. Safety Devices

- Use appropriate safeguards to prevent contact with rotating parts (shafts, impeller, etc.).
- After installation (and before electrical connection) immediately refit any guards which have been removed during installation.

Danger

The following must always be observed in the event of free exhaust fans (even if an inlet guard grille is present):
• Keep people and objects away from the fan inlet side!
• Block off the appropriate area!

3.4. Professional Staff

- Installation of ITF and any work on it is to be carried out by skilled professionals only with due regard to these operating instructions and any applicable regulations.
- Electrical connection to be carried out by qualified electricians only.

3.5. Protective Gear

Warning!

Ensure that members of staff are wearing protective gear appropriate to their deployment and environment. The protective clothing is specified below!

3.6. Specific Hazards

3.6.1. Noise Emission

The sound emission expected in normal use of the fan is documented in the technical lists and should be duly taken into account.

- Wear ear protection when working near to or on the running fan!

3.6.2. Heavy Loads

The heavy weight of the ITF and its components entail the following risks in transit and during installation:

- Risk of being trapped, crushed or cut by moving or toppling machinery
- Danger of falling components

- **Do not stand or work under suspended loads.**
- **Wear a protective helmet, safety shoes and gloves.**

3.6.3. Rotating Shafts and Impellers

Objects falling onto rotating shafts and impellers can fly off at an angle and cause serious injury. Articles of clothing and hair can get caught in rotating shafts and impellers.

- **Do not remove guards during operation.**
- **Do not wear loose-fitting clothing when working near rotating shafts and impellers**
- **Wear goggles**

3.6.4. Hot Surfaces

There is a risk of sustaining burns or scalds on hot surfaces during operation.

- **Do not touch the motor during operation.**
- **When the roof fan has stopped wait until the motor has cooled down.**
- **Wear protective gloves**

3.7. Structural Modifications, Spare Parts

Caution: Unauthorised structural modifications may not be made to the fan. Fläkt Woods will not accept liability for any damage arising as a result of any modifications. Use only genuine spare parts supplied by Fläkt Woods Limited.

3.8. Installation and Maintenance

Danger

The following steps should be taken before working on the fan:

1. Switch off the installation and take measures to prevent it from being switched back on accidentally.
2. Display the following message on a sign:

Do not switch on! Work currently in progress on the installation.

4. Product Description

4.1 Induction Thrust Fans

The air intake of the induction fan is at the lower side. The air is conveyed over the motor and then directed towards a horizontal discharge nozzle. The impeller is of welded and painted steel sheet and the casing is made of galvanised sheet steel.

The feed cable is specified for high thermal loads, protected against mechanical stresses, and lead to a metal connection box placed on the casing back side.

The units are designed for ceiling installation (hanging) and may only be fitted at the side channels with specially certified anchoring bolts.

5. Transport and Storage

5.1. Packaging

ITF are packaged in sturdy cardboard boxes or wooden crates depending on their size and weight. Instructions on removing transportation locks are enclosed.

5.2. Symbols on Packaging

The following symbols are printed on the cardboard boxes:

Symbol	Meaning
	Handle with care
	Keep dry
	Top

5.3. Transportation of ITF

Warning

Danger of injury from falling components!

- Use tested and appropriate load handling equipment only (see type plate or data sheet).
- Secure load at all times.
- Do not stand under suspended loads.

1. Select means of transport according to weight and dimensions of fan.
2. Lift roof fan at the lifting points provided (Lifting eyes, Base frame, Base plate, Housing frame, fixing channels)
3. When transporting by crane, four point lifting is to be provided (2 slings)
4. If necessary screw lifting shackle to the unit.
5. Secure load using e.g. straps or other aids designed to prevent slipping.
6. Handle ITF with care and avoid damage.

5.4. Storage of ITF Fans

Caution Risk of corrosion!

- Store the fan in its packaging, adding additional protection in relation to the storage environment.
- Store ITF in a well-ventilated room only at normal temperatures and in a non-corrosive atmosphere.
- Store ITF at less than 70 % atmospheric humidity.
- Adhere to permissible temperature of –20 °C to +40 °C.

6. Installation

6.1. Safety Instructions for Installation

- Observe the safety instructions and preventive measures in Section 3 and the relevant local legal requirements.

6.2. Installation Preparation

✓ Ensure place of installation suitable for the ITF in terms of its category, condition, ambient temperature and environmental media (Check with certificate).
✓ Base level and with sufficient load-bearing capacity.
✓ Place of installation horizontal

1. Unpack the ITF carefully.
2. Remove all the packaging and dispose of it properly.

6.3. Carrying out Installation

The fans are designed for installation below ceiling. Every fan is equipped with its own fitting channels.

- Please observe the arrow for flow direction on the unit for correct installation!
- Make sure that the air can flow into and off the fan without being obstructed.
- For installation only specially certified plugs are to be used.

- Install the fan horizontally and without tensions to the ceiling structure by using the fitting channels provided. Check

✓ The fans has been fitted with certified plugs!
✓ The fan has been fitted without tension and distortions!
✓ The impeller is running idle and without touching the intake cone!

Caution **In emergency mode the ITF must be operated directly from the mains. Frequency converter must be by passed in this operating condition.**

6.4. Installing Safety Devices

Note Conformity with DIN EN 294 only relates to the safety guard installed insofar as it is supplied with the fan. The operator of the system is responsible for full compliance with DIN EN 294

.

1. Fit guards to protect exposed inlet openings (DIN EN 294).
2. Design safety devices in such a way that they prevent objects from being sucked in or from falling in.
3. Ensure that all the mechanical safety devices are fitted.

7. Electrical Connection

7.1. Safety Instructions for Electrical Connection

Caution! Danger of electric shock!

Warning

- Observe the safety instructions and preventive measures in Section 3 and all relevant legal requirements.

Caution **In order to prevent the unexpected operation, a service isolator switch/isolator is recommended. (Optional).**

Caution **When connecting the ITF, special attention should be paid to cable routing!**

- Protect cables in hot interior space.
- Protect cable from hot exhaust air
- Preferred cable routing through the outside
- Protect cables against hot fan housing surfaces, e.g. through metal tube with distance pieces.
- Do not mount isolators directly to the fan housing.

Caution In the case of fire, the ITF require a secured electric supply. Securing of electric supply exceeding public mains supply by means of electric power generation units (equivalent current) depends on the respective public law requirements.

For electric supply of ITF in buildings only use electric line systems whose function maintenance class was proved by a general test certificate issued by the building authorities. The electric line systems must be laid with protection against mechanical damage. They must not touch the fan housing at any point. The electric line systems must be laid up to the fan/motor terminal box - in case of installation in buildings - outside of the room to be extracted as well as outdoors. Please check the national regulations, and project requirements.

7.2. Connecting the Motor

Note: The wiring diagram is placed inside the connection box or affixed to the fan casing.

✓ Current, voltage and frequency of mains supply checked for conformity with fan type plate and motor rating plate.
✓ Star-delta or soft start provided for motors with a nominal output >4 kW.
✓ Service switch present if applicable.
✓ **The fan has been protected against an unexpected start!**
✓ **Chapter 3. "Safety" to be respected!**

1. If necessary install service switch.
2. Mains to be lead from outside to the connecting cable or to the service switch.
3. Fan to be connected in accordance to attached wiring diagram.
4. Ensure that all electrical safety devices are in place and correctly connected.

Caution **The motors are designed for S1 continual operation. With more than three starts per hour the suitability of the motor is to be confirmed by Fläkt Woods Limited.**

7.2.1 Connection Example

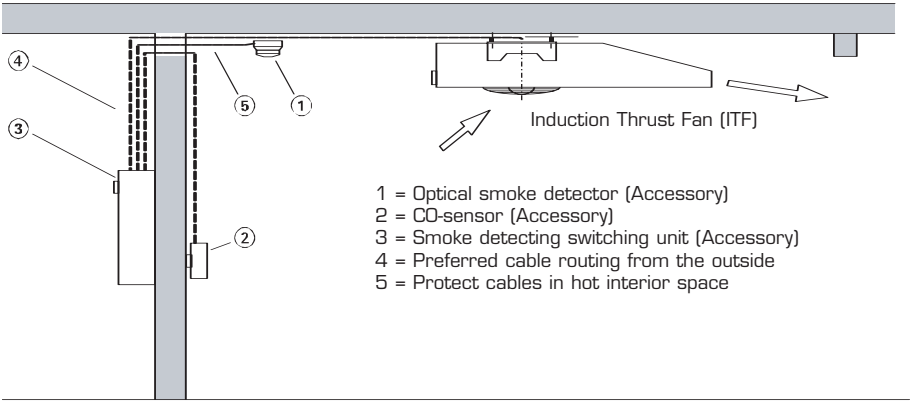

7.3. Motor Protection

Caution **No standard motor protection has been provided by the supplier!**

In the case of ITF, the motor must not be protected in the event of fire. All motor protection devices must be automatically by-passed and/or deactivated.

For this by-pass action use the smoke detector-switch board (option)

7.4. Carrying out a Test Run

Danger

Risk of injury from rotating impeller!

- Never reach into the impeller when the fan is open.

1. Disconnect motor from the mains.
2. Take measures to prevent ITF from being accidentally switched on.
3. Clear the ducting system and fan of all foreign bodies (tools, small parts, construction waste, etc).
4. Close all the inspection openings.
5. Switch on fan and check direction of rotation of impeller by comparing it with the arrow on the fan indicating the direction of rotation.
6. If the direction of rotation is wrong, reverse the polarity of the motor having due regard to the safety instructions.
7. Once operating speed has been reached measure the current consumption and compare it with the nominal motor current on the roof fan type plate or motor rating plate.
8. If there is continuous overload switch the ITF off immediately.
9. Check that the ITF runs smoothly and quietly. Ensure that there are no unusual oscillations or vibrations.
10. Check the motor for any abnormal noises.

8. Commissioning/Operation

8.1. Commissioning the Fan

Danger

Risk of injury from rotating parts and hot surfaces!

- Ensure that all the safety devices are fitted.

Material damage may be caused by overload from excessive starting currents!

- Adhere to the output limits imposed by the power supply company.

Note After the complete installation of ITF, a trouble free interaction of all components has to be stated by a commissioning acceptance check. The ITF manufacturer may point out the necessity of this acceptance check. It has to be initiated by the owner of the installation. The result of the acceptance check has to be documented by the owner, and to be filed by the owner/user.

1. Check the working order of all control instruments connected.
2. Switch on ITF.

9. Maintenance

9.1. Safety Instructions for Maintenance

- Observe the safety instructions and preventive measures in Section 3 and all relevant legal requirements.
- Follow the directions of the motor supplier and the instructions specified by the manufacturers of the switches and control units.

Warning

Work on the impeller may only be executed after a safe cut off of the electrical feed!

Note The ITF must be checked at regular intervals according to the instructions attached. The user has to document his checks. The documents are to be kept by the user of the ITF installation.

Caution **Repair or major maintenance works have to be made in the works of the manufacturer or by staff persons from Fläkt Woods or by persons of companies which are authorised by Fläkt Woods.**

9.2. Maintenance Preparation

1. Disconnect motor from the mains.
2. Fans should be switched off by the isolator switch (if fitted).
3. Take measures to prevent roof fan from being switched on by accident.
4. Wait until the impeller has stopped.
5. Wait until all hot surfaces have cooled down.
6. Remove any residues from the fan.

Inspection is to be made by using the intake and discharge openings.

If the motor-impeller has to be dissembled for cleaning. The following procedures are recommended:

1. Motor connection cables to be disconnected at connection box (1).
2. Remove connection cable through open inspection door (2) and disconnect from connection box (1) to inside

Fig 9-1: Impeller dismantling

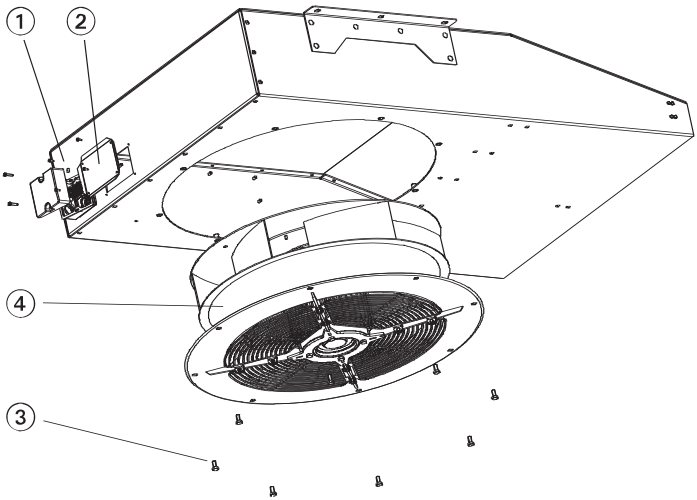

Before loosening bolts of the motor impeller (3) care must be taken to prevent the unit from falling down – e.g. by using a lifting device or elevating platform!

Danger

1. Loosen bolts (3)
2. Motor impeller unit (4) out of the casing by lowering it.

Refit in reverse order

To re commission fan follow instructions, chapter 7 and 8.

9.3 Observing Regular Inspection Intervals

In order to assure a safe operation we recommend fans are checked at regular intervals by qualified service personnel or by a specialised company and to document the result of these checks. The type, magnitude, and interval period as well as all works which may be necessary.

The recommendations for checks and maintenance acc. to VDMA 24186-1

Pos	Description	monthly	1/2 annual	annual
1	Tripping device	x		
2.0	**Fan**			
2.1	Check fan for function and readiness for service (trial run 2h*)		x	
2.2	Functional testing of the automatic bridging of all excess temperature and over current monitors		x	
2.3	Check for soiling, damage, corrosion and fastening		x	
2.4	Clean in order to maintain function		x	
2.5	Check impeller direction of rotation			x
2.6	Check connections for leaks			x
2.7	Check impeller for unbalanced state			x
2.8	Check safety devices for functioning			x
3.0	**Motor 1)**			
3.1	Check externally for soiling, damage, corrosion and fastening		x	
3.2	Clean in order to maintain function			x
3.3	Check bearings for noises 1)			x
3.4	Check terminal clamps for tight fit			x
3.5	Measure voltage			x

Caution 1) The motor bearings are supplied permanently lubricated by the factory; It is recommended, to exchange the motor bearings after approx. two years. In case of bearing noises contact the Fläkt Woods service department in order to examine or change defective bearings.

Caution **The maintenance instructions of the motor supplier as well as the instructions for the switches and control units should be respected.**

Caution **No high pressure cleaners, or steam jet cleaners, are to be used!**

10. Malfunction/Disturbances

If malfunction/disturbances occur during operation which cannot be repaired by maintenance personnel please contact the service department of Fläkt Woods Limited.

11. Service, Spare Parts and Accessories

Fläkt Woods Ltd
Axial Way
Colchester
Essex
CO4 5ZD

Tel: +44 (0)1206 222 555
Fax: +44 (0)1206 222 777
Email: info.uk@flaktwoods.com
Web: www.flaktwoods.com/serviceuk

11.1. Ordering Spare Parts

- Use only genuine spare parts supplied by Fläkt Woods Limited as featured in the list of spare parts.

The use of spare parts supplied by other manufacturers may compromise the safety of the equipment.

The requirements for CE conformity are no longer met if spare parts supplied by other manufacturers are fitted.

Fläkt Woods Limited shall not accept any liability or provide any warranty cover in respect of primary or secondary damage arising as a consequence of using spare parts supplied by other manufacturers.

12. Annex

12.1. Further Documentation Supplied by Fläkt Woods Limited

Type of Documentation	File Location
Electric wiring diagram	below
EC Declaration of Conformity to EC Machinery Directive (98/37/EC)	Annex

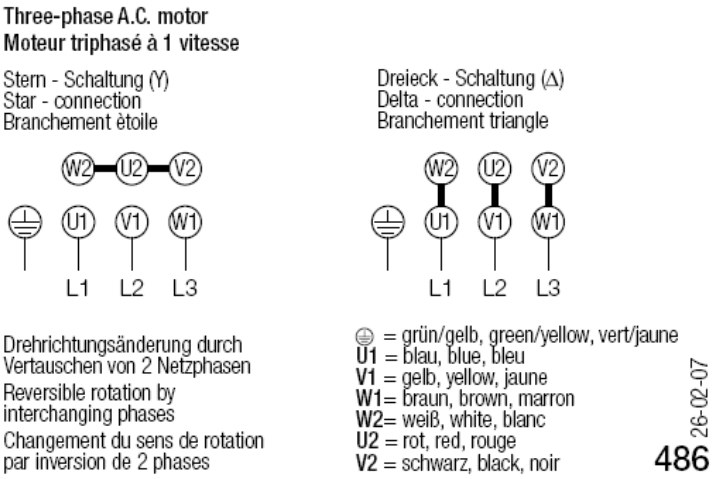

12.2.1 Bearings without relubrication device

The bearings are normally supplied greased for life with a high-performance grease that is resistant to ageing and does not require maintenance under normal operating conditions. When it is necessary to replace the bearings as a result of normal wear and tear, please contact our service department or a company authorised by Fläkt Woods Limited.

EC DECLARATION OF CONFORMITY

To EC Machinery Directive (98/37/EC)
EC Low Voltage Directive (73/23/EEC, as amended 93/68/EEC)
EC- Directive to Building Products (89/106/EEC

We hereby declare that, as designed, constructed and placed in the stream of commerce by ourselves, the machinery named below meets the relevant health and safety requirements specified in the EC Directives listed below. This declaration shall be null and void if modifications are made to the machine without consulting us and obtaining our approval.

Designation: Smoke Extract Fan
Machine type: RDM 56; RDM 57; RWM 57; SLCS; AGM; RGM
Year of construction/type designation: See type plate

Relevant EC Directives:
EG- Machinery Directive (98/37/EG)
EC Low Voltage Directive (73/23/EWG, i.d.F. 93/68/EWG)
EC-Directive to Building Products (89/106/EWG

Harmonised standards applied, in particular:
DIN EN ISO 12100-1, 12100-2, EN 60204-1, DIN EN 1

Date / Signature of Manufacturer:
Department Manager
i.V.
01.07.2007

Technical Director
i.V.
01.07.2007

For the full list of applied standards and technical specifications see manufacturer's documentation.

We Bring Air to Life

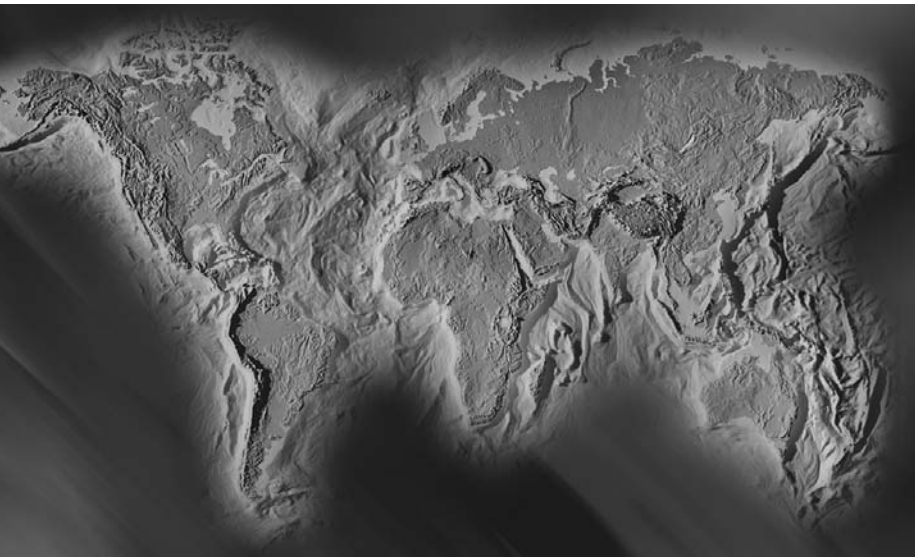

Fläkt Woods Group provides a full range of products and solutions for buildings ventilation, air treatment and industrial air movement

Sales Offices available World Wide - See our website for details

www.flaktwoods.co.uk

Sales Office

Fläkt Woods Ltd
Unit 6240, Bishops Court
Solihull Parkway
Birmingham
B37 7YB
Tel: +44 (0)121 717 4680
Fax: +44 (0)121 717 4699

Sales Office

Fläkt Woods Ltd
First Floor, Entrance 6,
Crossford Court
Dane Road, Sale, Cheshire
M33 7BZ
Tel: +44 (0)161 969 1992
Fax: +44 (0)161 969 4612

Head Office

Fläkt Woods Ltd
Axial Way
Colchester
Essex
CO4 5ZD
Tel: +44 (0)1206 222 555
Fax: +44 (0)1206 222 777

Due to a policy of continuous development and improvement the right is reserved to supply products which may differ from those illustrated and described in this publication. Certified dimensions will be supplied on request on receipt of order.

Copyright, Fläkt Woods Ltd, 2008.

All rights reserved. No part of this publication may be produced in any material form by any means without the written permission of Fläkt Woods Ltd. Any unauthorised use of this data may result in legal proceedings.

FWJRG/0609/PN401074

FläktWoods